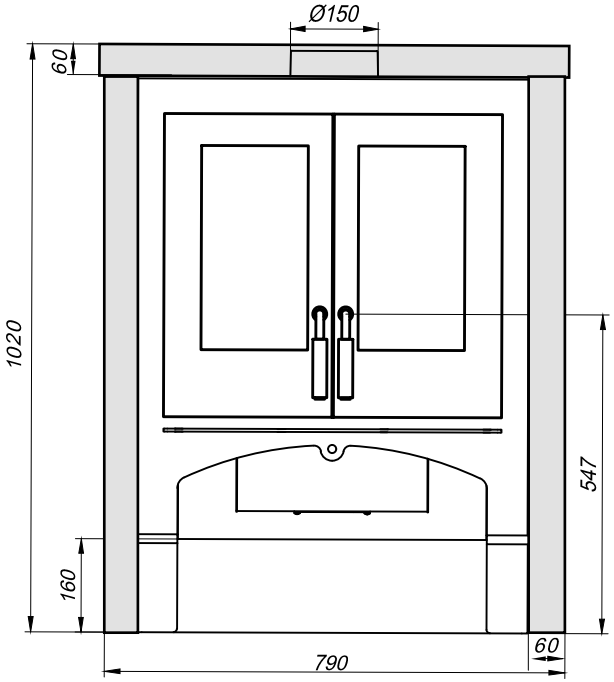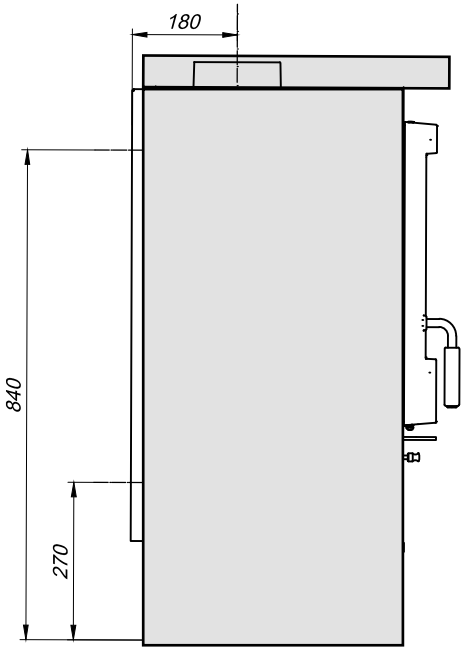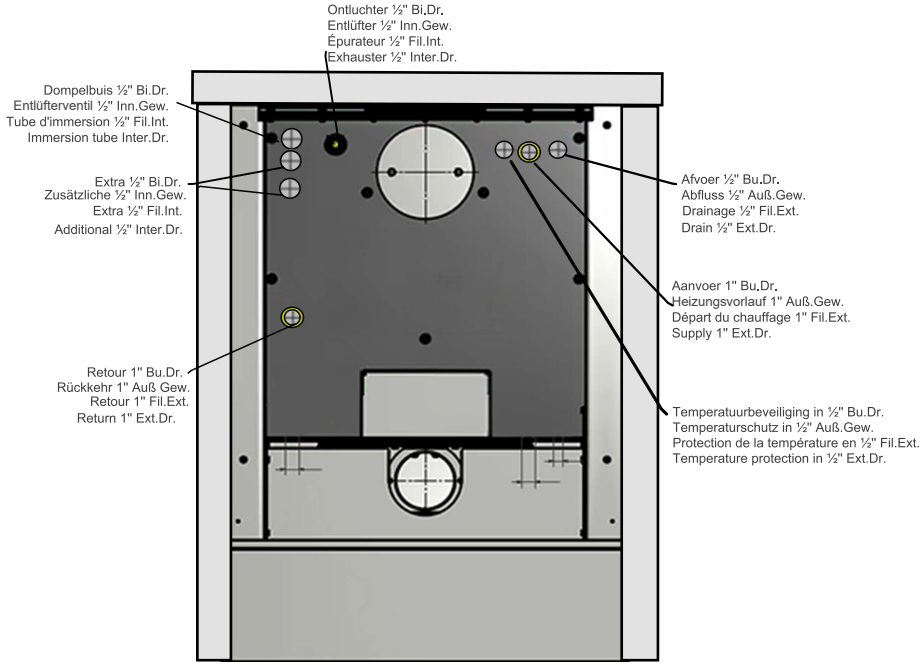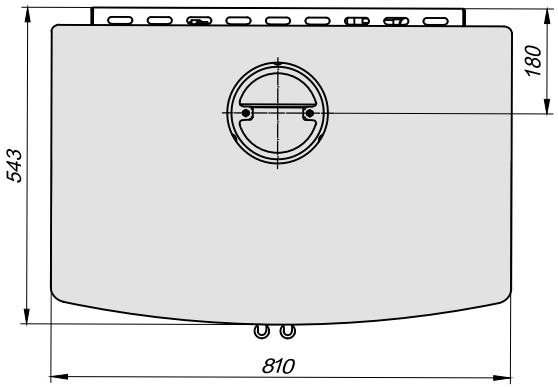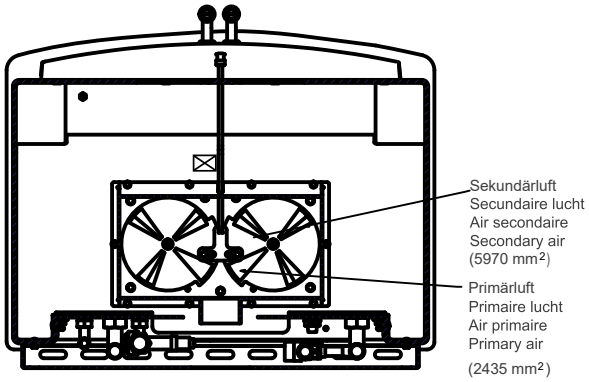Cottage - Lodge CV
Speksteen / Speckstein / Pierre Ollaire / Soapstone